MITSUBISHI HEAVY INDUSTRIES
AIR CONDITIONING EUROPE



SRK71ZR-W

7.1kW

Specifications

Nominal cooling capacity		kW	7.1
Nominal heating capacity		kW	8.0
Sound power level	Cooling	dB(A)	57
	Heating	dB(A)	60
Sound pressure level	Cooling(Hi/Me/Lo/Ulo)	dB(A)	44 / 41 / 37 / 25
	Heating(Hi/Me/Lo/Ulo)	dB(A)	46 / 39 / 35 / 28
Air flow	Cooling(Hi/Me/Lo/Ulo)	m^3/min	20.5 / 18.6 / 16.2 / 10.4
	Heating(Hi/Me/Lo/Ulo)	m^3/min	25.0 / 19.8 / 17.3 / 13.3
Exterior dimensions (H×W×D)		mm	339×1197×262
Net weight		kg	15.5
Refrigerant piping size	Liquid / Gas	mm (ø inch)	6.35 (1/4") / 15.88 (5/8")
Clean filter			Allergen Clear Filter ×1, Photocatalytic Washable Deodorizing Filter×1

• The data is measured under the following conditions(ISO-T1, H1). Cooling: Indoor temp. of 27°CDB, 19°CWB, and outdoor temp. of 35°CDB. Heating: Indoor temp. of 20°CDB, and outdoor temp. of 7°CDB, 6°CWB.
• Sound level the value in an anechoic chamber. During operation these values are somewhat higher due to ambient conditions.

Because of our policy of continuous improvement, we reserve the right to make changes in all specifications without notice.

Schematics

SRK63ZR-W SRK71ZR-W SRK80ZR-W
SRK63ZR-S SRK71ZR-S SRK80ZR-S SRK100ZR-S

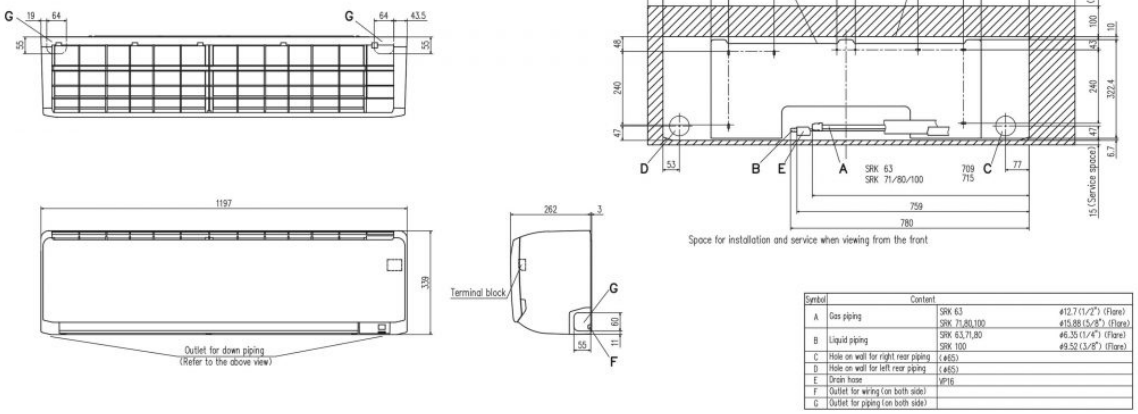

Symbol	Content		
A	Gas piping	SRK 63	ø12.7 (1/2") (Flare)
		SRK 71,80,100	ø15.88 (5/8") (Flare)
B	Liquid piping	SRK 63,71,80	ø6.35 (1/4") (Flare)
		SRK 100	ø9.52 (3/8") (Flare)
C	Hole on wall for right rear piping	(ø65)	
D	Hole on wall for left rear piping	(ø65)	
E	Drain hose	VP16	
F	Outlet for wiring (on both side)		
G	Outlet for piping (on both side)		

Because of our policy of continuous improvement, we reserve the right to make changes in all specifications without notice.