Fully flat cassette Air Conditioning Technical Data

FFA-A9



FFA25A2VEB9
FFA35A2VEB9
FFA50A2VEB9
FFA60A2VEB9

EEDEN21

TABLE OF CONTENTS

FFA-A9

1	Features	4
	FFA-A9	4
2	Specifications	5
3	Safety device settings	7
4	Options	8
5	Dimensional drawings	9
6	Centre of gravity	11
7	Piping diagrams	12
8	Wiring diagrams	13
	Wiring Diagrams - Three Phase	13
9	Sound data	14
	Sound Pressure Spectrum	14
10	Air flow patterns	16
	Air Flow Pattern - Cooling	16
	Air Flow Pattern - Heating	20

1 Features

1 - 1 FFA-A9

Unique design in the market that integrates fully flat into the ceiling

1

- Fully flat integration in standard architectural ceiling tiles, leaving only 8mm
- Remarkable blend of iconic design and engineering excellence with an elegant finish in white or a combination of silver and white
- Unified indoor unit range for R-32 and R-410A
- Combining with R-32 Bluevolution technology, reduces environmental impact with 68% compared to R-410A, leads directly to lower energy consumption thanks to its high energy efficiency and has up to lower 16% refrigerant charge
- Two optional intelligent sensors improve energy efficiency and comfort
- Individual flap control: flexibility to suit every room layout without changing the location of the unit!
- Reduced energy consumption thanks to specially developed small tube heat exchanger, DC fan motor and drain pump
- Optional fresh air intake
- Branch duct discharge allows to optimize air distribution in irregular shaped rooms or to supply air to small adjacent rooms
- Standard drain pump with 630mm lift increases flexibility and installation speed





Infrastructure cooling



Inverter


Presence & floor sensor


Home leave operation


Fan only



Draught prevention



Auto cooling-heating changeover


Whisper quiet


Ceiling soiling prevention


Individual flap control


Vertical auto swing


Fan speed steps



Dry programme


Air filter



Weekly timer


Infrared remote control


Wired remote control


Centralised control


Online controller via app



Auto-restart


Self diagnosis


Drain pump kit


Twin/triple/ double twin application


Multi model application


VRV for residential application

2 Specifications

1 - 1 FFA-A9

Technical specifications					FFA25A9	FFA35A9	FFA50A9	FFA60A9
Casing	Material				Galvanised steel plate			
Dimensions	Unit	Height		mm	260			
		Width		mm	575			
		Depth		mm	575			
	Packed unit	Height		mm	280			
		Width		mm	686			
		Depth		mm	597			
Weight	Unit			kg	16.0		17.5	
	Packed unit			kg	18.0		19.0	
Heat exchanger	Inside length			mm	1,295		1,248	
	Outside length			mm	1,342			
	Rows	Quantity			2		3	
	Fin pitch			mm	1.20			
	Passes	Quantity			5		7	
	Face area			m^2	0.29		0.30	
	Stages	Quantity			12		16	
	Fin	Type			Cross fin coil (multi slit fins and hi-XA tubes)			
Fan	Model				QTS32D15M			
	Type				Turbo fan			
	Quantity				1			
	Air flow rate	Cooling	High	m^3/min	9.0	10.0	12.7	14.5
				cfm	318	353	448	512
			Medium	m^3/min	8.0	8.5	10.9	12.5
				cfm	282	300	385	442
			Low	m^3/min	6.5		8.6	9.5
				cfm	230		304	336
		Heating	High	m^3/min	9.0	10.0	12.7	14.5
				cfm	318	353	448	512
			Medium	m^3/min	8.0	8.5	10.9	12.5
				cfm	282	300	385	442
			Low	m^3/min	6.5		8.6	9.5
				cfm	230		304	336
Fan motor	Quantity				1			
	Model				ARW5204DK			
	Speed	Steps			3			
		Cooling	High	rpm	653		793	900
Fan motor	Speed	Cooling	Low	rpm	447		538	581
		Heating	High	rpm	653		793	900
			Low	rpm	447		538	581
	Output	High		W	50			
Sound power level	Cooling			dBA	48.0	51.0	56.0	60.0
Sound pressure level	Cooling	High		dBA	31.0	34.0	39.0	43.0
		Medium		dBA	28.5	30.5	34.0	40.0
		Low		dBA	25.0		27.0	32.0
	Heating	High		dBA	31.0	34.0	39.0	43.0
		Medium		dBA	28.5	30.5	34.0	40.0
		Low		dBA	25.0		27.0	32.0
Refrigerant	Type				R-32 / R-410A			
Piping connections	Sound absorbing insulation				Foamed polyurethane			
	Liquid	Type			Flare connection			
		OD		mm	6.35			
	Gas	Type			Flare connection			
		OD		mm	9.52		12.70	
	Drain				VP20 (I.D. 20/O.D. 26)			
	Heat insulation				Foamed polystyrene/polyethylene			
Decoration panel	Model				BYFQ60C2W1W			
	Colour				White (N9.5)			
	Dimensions	Height		mm	46			
		Width		mm	620			
		Depth		mm	620			
	Weight			kg	2.8			
Decoration panel 2	Model				BYFQ60C2W1S			
	Colour				SILVER			
	Dimensions	Height		mm	46			
		Width		mm	620			
		Depth		mm	620			
	Weight			kg	2.8			

2 Specifications

1 - 1 FFA-A9

Technical specifications				FFA25A9	FFA35A9	FFA50A9	FFA60A9
Decoration panel 3	Model			BYFQ60B2W1			
	Colour			White (RAL9010)			
	Dimensions	Height	mm	55			
		Width	mm	700			
		Depth	mm	700			
	Weight		kg	2.7			
Decoration panel 4	Model			BYFQ60B3W1			
	Colour			WHITE (RAL9010)			
	Dimensions	Height	mm	55			
		Width	mm	700			
		Depth	mm	700			
	Weight		kg	2.7			
Air filter	Type			Resin net			
Control systems	Infrared remote control			BRC7EB530W (standard panel) / BRC7F530W (white panel) / BRC7F530S (grey panel)			
	Wired remote control			BRC1H52W/S/K / BRC1E53A / BRC1E53B / BRC1E53C / BRC1D52			

Standard accessories: Installation and operation manual; Quantity: 1;

Standard accessories: Drain hose; Quantity: 1;

Standard accessories: Hose band; Quantity: 1;

Standard accessories: Washer for hanger bracket; Quantity: 8;

Standard accessories: Screws; Quantity: 4;

Standard accessories: Thermal insulation tube; Quantity: 2;

Standard accessories: Sealing material; Quantity: 4;

Standard accessories: Tie-wraps; Quantity: 7;

Electrical specifications			FFA25A9	FFA35A9	FFA50A9	FFA60A9
Power supply	Phase		1~			
	Frequency	Hz	50			
	Voltage	V	220-240			

3 Safety device settings

3 - 1 Safety Device Settings

FFA-A9

Safety devices		FFA25-60A2VEB(9)
PCB fuse		250V, 3.15A
PCB fuse (fan driver)		---
Fan motor overcurrent protection	Nominal	0.74A
Fan motor thermal protector	Maximum	108°C
Drain pump fuse		---

4D110743

4 Options

4 - 1 Options

FFA-A9

Option kit	Product name	Compatibility					Availability
		BYFQ60B2W1 BYFQ60B3W1	BYFQ60C2W1W	BYFQ60C2W1S	BYFQ60C4W1W	BYFQ60C4W1S	SA
							FFA25A2VEB(9) FFA35A2VEB(9) FFA50A2VEB(9) FFA60A2VEB(9)
Decoration panel - Standard	BYFQ60B2W1	-	-	-	-	-	✓
Decoration panel - Standard	BYFQ60B3W1	-	-	-	-	-	✓
Decoration panel - White	BYFQ60C2W1W	-	-	-	-	-	✓
Decoration panel - Silver	BYFQ60C2W1S	-	-	-	-	-	✓
Decoration panel - White	BYFQ60C4W1W ⑭	-	-	-	-	-	✓
Decoration panel - Silver	BYFQ60C4W1S ⑭	-	-	-	-	-	✓
Conversion wire harness	EKRS22	No	No	No	Yes	Yes	✓
Sensor kit - White	BRYQ60A2W③	No	Yes	No	Yes	No	✓
Sensor kit - Silver	BRYQ60A2S③	No	No	Yes	No	Yes	✓
Air discharge outlet sealing member	BDBHQ44C60	Yes	Yes	Yes	Yes	Yes	✓
Panel spacer	KDBQ44B60	Yes	No	No	No	No	✓
Long-life replacement filter	KAF441C60	Yes	Yes	Yes	Yes	Yes	✓
Fresh air intake kit	KDDQ44XA60	Yes	Yes	Yes	Yes	Yes	✓
Remote control | Infrared type | HP	BRC7EB530W①②	Yes	No	No	No	No	✓
Remote control | Infrared type | -HP- | White	BRC7F530W①②	No	Yes	No	Yes	No	✓
Remote control | Infrared type | -HP- | Silver	BRC7F530S①②	No	No	Yes	No	Yes	✓
Wired remote control	BRC1D528②, BRC1H51(9)W/S/K, BRC1H81W/S	Yes	Yes	Yes	Yes	Yes	✓
Wired remote control	BRC1E53A7⑧/BRC1E53B7⑨/BRC1E53C7⑩⑪	Yes	Yes	Yes	Yes	Yes	✓
Simplified remote control (with operation mode selector button)	BRC2E52C7⑤⑪	Yes	Yes	Yes	Yes	Yes	✓
Simplified remote control (without operation mode selector button)	BRC3E52C7⑤⑪	Yes	Yes	Yes	Yes	Yes	✓
Central remote control	DCS302B51	Yes	Yes	Yes	Yes	Yes	✓
Unified ON/OFF controller	DCS301B51	Yes	Yes	Yes	Yes	Yes	✓
Schedule timer	DST301B51	Yes	Yes	Yes	Yes	Yes	✓
Wiring adaptor for electrical appendices	KRP1B57	Yes	Yes	Yes	Yes	Yes	✓
Wiring adaptor for electrical appendices	KRP4A53	Yes	Yes	Yes	Yes	Yes	✓
Wiring adaptor (hour meter)	EKRP1B2	Yes	Yes	Yes	Yes	Yes	✓
Installation box for adaptor PCB	KRP1B101, KRP1BA101	Yes	Yes	Yes	Yes	Yes	✓
Remote sensor	KRCS01-4B	Yes	Yes	Yes	Yes	Yes	✓
iTouch Controller	DCS601C51	Yes	Yes	Yes	Yes	Yes	✓
Centralised control systems	DCC601A51	Yes	Yes	Yes	Yes	Yes	✓
Intelligent touch controller	DCM601A5A	Yes	Yes	Yes	Yes	Yes	✓
Digital input adaptor	BRP7A53⑥	Yes	Yes	Yes	Yes	Yes	✓
Wi-Fi adaptor for smartphones	BRP069A81⑬	Yes	Yes	Yes	Yes	Yes	✓

Notes

① The sensing function is not available.
② The independently-controllable-flaps function is not available.
③ This option cannot be used with -RR- and -RQ- models.
④ The independently-controllable-flaps function is not available in combination with -RR- and -RQ- models.
⑤ Included languages are:
Language pack -1-: English, German, French, Dutch, Spanish, Italian, and Portuguese.
With PC cable -EKPCCAB3- in combination with the Updater PC software, you can additionally change the language to:
Language pack -2-: English, Bulgarian, Croatian, Czech, Hungarian, Romanian, and Slovenian.
Language pack -3-: English, Greek, Polish, Russian, Serbian, Slovak, and Turkish.
⑥ Only possible in combination with remote control -BRC2/3E52C7, BRC1E53A/B/C7, BRC1H51(9)W/S/K, BRC1H81W/S-.
⑦ Requires installation box for adaptor PCB
⑧ Included languages are: English, German, French, Italian, Spanish, Portuguese, and Dutch.
⑨ Included languages are: English, Czech, Croatian, Hungarian, Slovenian, Romanian, and Bulgarian.
⑩ Included languages are: English, Russian, Greek, Turkish, Polish, Albanian, and Slovak.
⑪ Language pack -3- of controller -BRC1E53C7- is different from that of controller -BRC2/3E52C7-.
⑫ Editable data for this drawing are available in the -GDE (E-BOM)- system.
⑬ Only possible in combination with wired or wireless remote control (e.g. -BRC1E*, BRC1H*, BRC7FA*-)
⑭ Only possible in combination with -EKRS22-

3D106135D

5 Dimensional drawings

5 - 1 Dimensional Drawings

FFA25-35A9

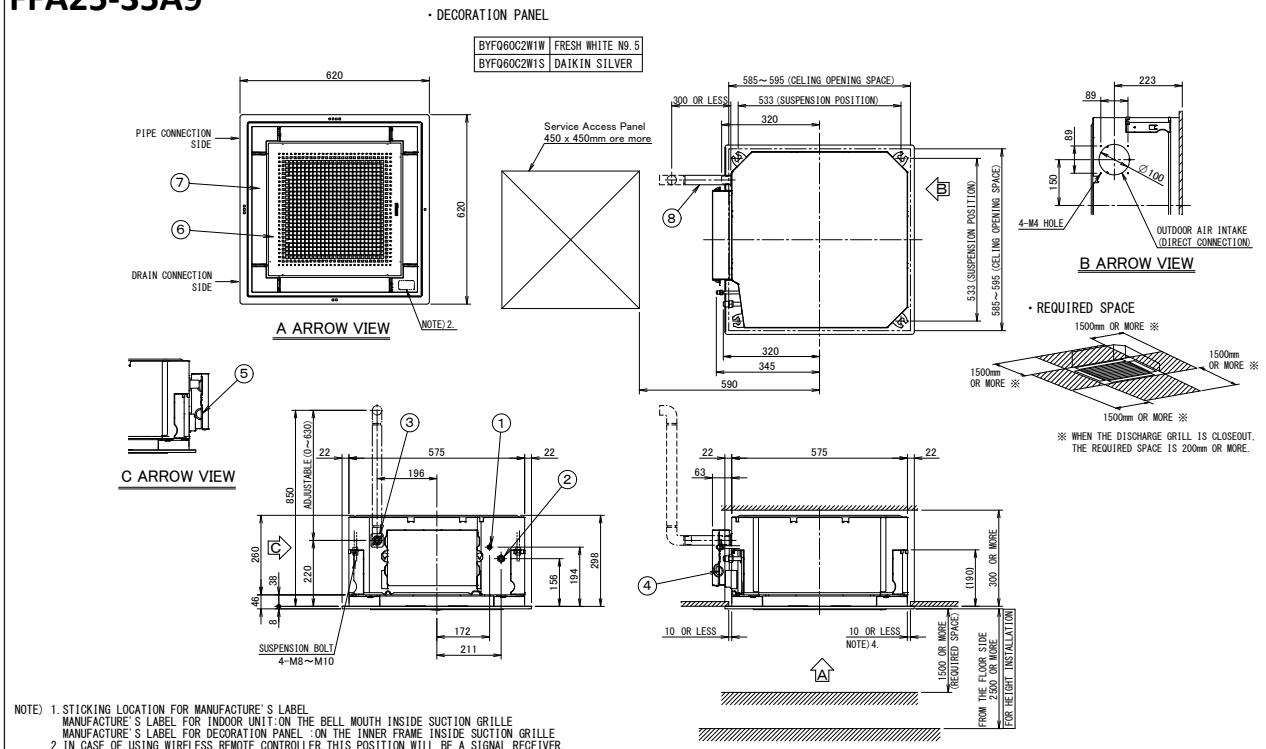

NOTE) 1. STICKING LOCATION FOR MANUFACTURE'S LABEL
MANUFACTURE'S LABEL FOR INDOOR UNIT:ON THE BELL MOUTH INSIDE SUCTION GRILLE
MANUFACTURE'S LABEL FOR DECORATION PANEL :ON THE INNER FRAME INSIDE SUCTION GRILLE
2. IN CASE OF USING WIRELESS REMOTE CONTROLLER,THIS POSITION WILL BE A SIGNAL RECEIVER. REFER TO THE DRAWING OF WIRELESS REMOTE CONTROLLER IN DETAIL.
3. WHEN THE TEMPERATURE AND HUMIDITY IN THE CEILING EXCEED 30℃ AND RH 80% OR THE FRESH AIR IS INDUCTED INTO THE CEILING OR THE UNIT CONTINUES 24 HOUR OPERATION,AN ADDITIONAL INSULATION (THICKNESS 10mm OR MORE OF GLASSWOOL OR POLYETHYLENE FORM) IS REQUIRED.
4. THOUGH THE INSTALLATION IS ACCEPTABLE UP TO MAXIMUM OF 595mm SQUARE CEILING OPENING, KEEP THE CLEARANCE OF 10mm OR LESS BETWEEN THE MAIN UNIT AND THE CEILING OPENING SO THAT THE PANEL OVERLAP ALLOWANCE CAN BE ENSURED.

ITEM	PART NAME	REMARK	ITEM	PART NAME	REMARK
1	LIQUID PIPE CONNECTION	φ6.4 (FRARE CONNECTION)	5	REMOTE CONTROL CODE AND CONTROL WIRING CONNECTION	
2	GAS PIPE CONNECTION	φ9.5 (FRARE CONNECTION)	6	AIR DISCHARGE GRILL	
3	DRAIN PIPE CONNECTION	VP20(O.D. φ26)	7	SUCTION GRILL	
4	POWER SUPPLY CONNECTION		8	DRAIN HOSE (ACCESSORY)	I.D. φ25 (OUTLET)

3D082433

FFA25-35A9

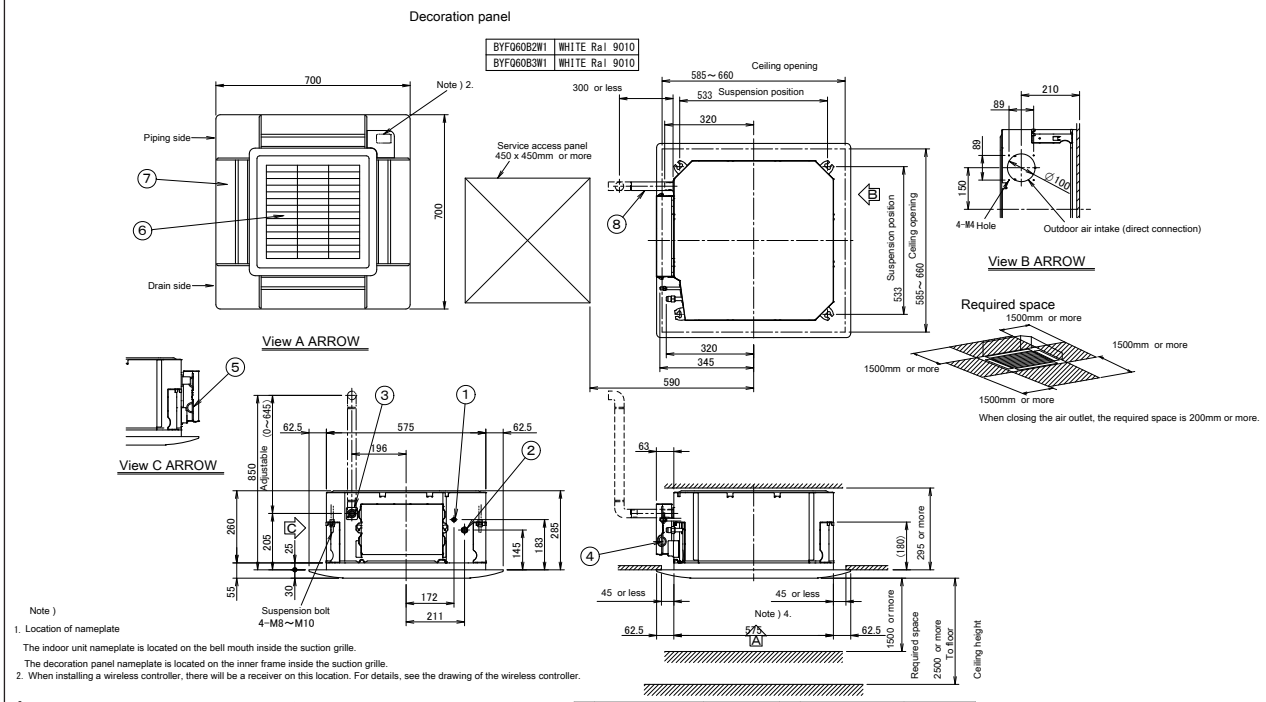

Note)
1. Location of nameplate
The indoor unit nameplate is located on the bell mouth inside the suction grille.
The decoration panel nameplate is located on the inner frame inside the suction grille.
2. When installing a wireless controller, there will be a receiver on this location. For details, see the drawing of the wireless controller.
3. If any of the following conditions are met, additional insulation (glass wool or polyethylene foam, thickness ≥10mm) is required:
Ambient conditions in the ceiling ≥ 30°C and 80% relative humidity.
Fresh air is inducted into the ceiling. The unit operates continuously.
4. Though the installation is acceptable up to maximum 660mm square ceiling opening, keep the clearance of 45mm or less between the indoor unit and the ceiling opening, so that the panel overlap allowance can be ensured.

Item	Part name	Remark	Item	Part name	Remark
1	Liquid pipe connection	φ6.4 Flare connection	5	Remote control wiring intake	
2	Gas pipe connection	φ9.5 Flare connection	6	Air discharge grille	
3	Drain pipe connection	VP20(O.D. φ26)	7	Air suction grille	
4	Power supply		8	Drain hose Accessory	I.D. φ25 Outlet

3D082434C

5 Dimensional drawings

5 - 1 Dimensional Drawings

5

FFA50-60A9

・DECORATION PANEL

BYFQ60C2W1W	FRESH WHITE N9.5
BYFQ60C2W1S	DAIKIN SILVER

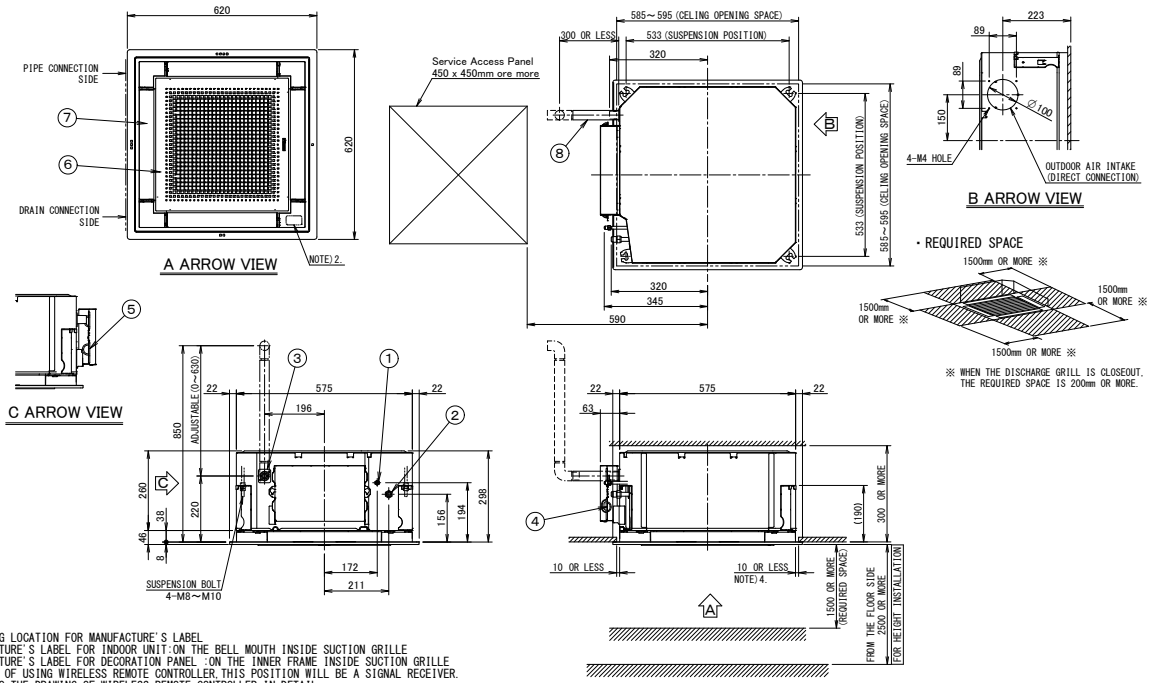

NOTE) 1. STICKING LOCATION FOR MANUFACTURE'S LABEL
MANUFACTURE'S LABEL FOR INDOOR UNIT:ON THE BELL MOUTH INSIDE SUCTION GRILLE
MANUFACTURE'S LABEL FOR DECORATION PANEL :ON THE INNER FRAME INSIDE SUCTION GRILLE
2. IN CASE OF USING WIRELESS REMOTE CONTROLLER, THIS POSITION WILL BE A SIGNAL RECEIVER. REFER TO THE DRAWING OF WIRELESS REMOTE CONTROLLER IN DETAIL.
3. WHEN THE TEMPERATURE AND HUMIDITY IN THE CEILING EXCEED 30℃ AND RH 80% OR THE FRESH AIR IS INDUCTED INTO THE CEILING OR THE UNIT CONTINUES 24 HOUR OPERATION, AN ADDITIONAL INSULATION (THICKNESS 10mm OR MORE OF GLASSWOOL OR POLYETHYLENE FORM) IS REQUIRED.
4. THOUGH THE INSTALLATION IS ACCEPTABLE UP TO MAXIMUM OF 595mm SQUARE CEILING OPENING, KEEP THE CLEARANCE OF 10mm OR LESS BETWEEN THE MAIN UNIT AND THE CEILING OPENING SO THAT THE PANEL OVERLAP ALLOWANCE CAN BE ENSURED.

ITEM	PART NAME	REMARK	ITEM	PART NAME	REMARK
1	LIQUID PIPE CONNECTION	φ6.4 (FRARE CONNECTION)	5	REMOTE CONTROL CODE AND CONTROL WIRING CONNECTION	
2	GAS PIPE CONNECTION	φ12.7 (FRARE CONNECTION)	6	AIR DISCHARGE GRILL	
3	DRAIN PIPE CONNECTION	VP20 (O.D. φ26)	7	SUCTION GRILL	
4	POWER SUPPLY CONNECTION		8	DRAIN HOSE (ACCESSORY)	I.D. φ25 (OUTLET)

3D082052

FFA50-60A9

Decoration panel

BYFQ60B2W1	WHITE Ral 9010
BYFQ60B3W1	WHITE Ral 9010

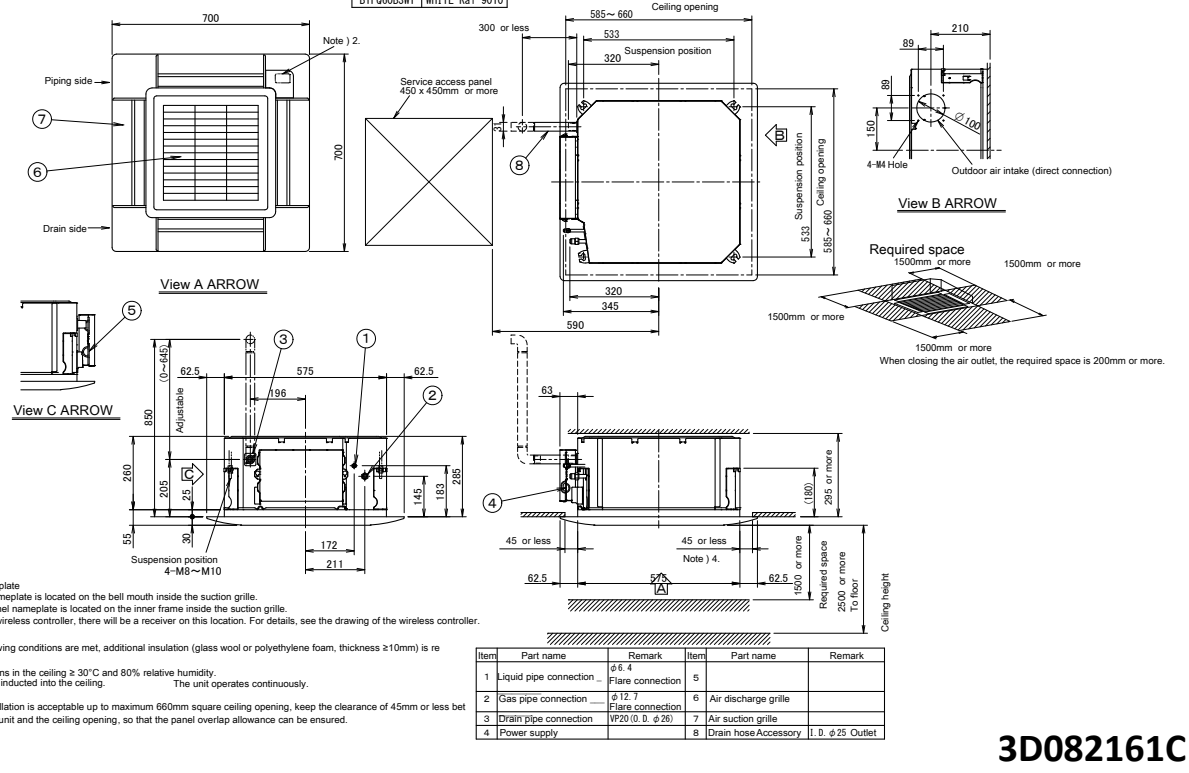

Note)
1. Location of nameplate
The indoor unit nameplate is located on the bell mouth inside the suction grille.
The decoration panel nameplate is located on the inner frame inside the suction grille.
2. When installing a wireless controller, there will be a receiver on this location. For details, see the drawing of the wireless controller.
3. If any of the following conditions are met, additional insulation (glass wool or polyethylene foam, thickness ≥10mm) is required:
Ambient conditions in the ceiling ≥ 30°C and 80% relative humidity.
Fresh air is inducted into the ceiling. The unit operates continuously.
4. Though the installation is acceptable up to maximum 660mm square ceiling opening, keep the clearance of 45mm or less between the indoor unit and the ceiling opening, so that the panel overlap allowance can be ensured.

Item	Part name	Remark	Item	Part name	Remark
1	Liquid pipe connection	φ6.4 Flare connection	5		
2	Gas pipe connection	φ12.7 Flare connection	6	Air discharge grille	
3	Drain pipe connection	VP20 (O.D. φ26)	7	Air suction grille	
4	Power supply		8	Drain hose Accessory	I.D. φ25 Outlet

3D082161C

6 Centre of gravity

6 - 1 Centre of Gravity

FFA-A9

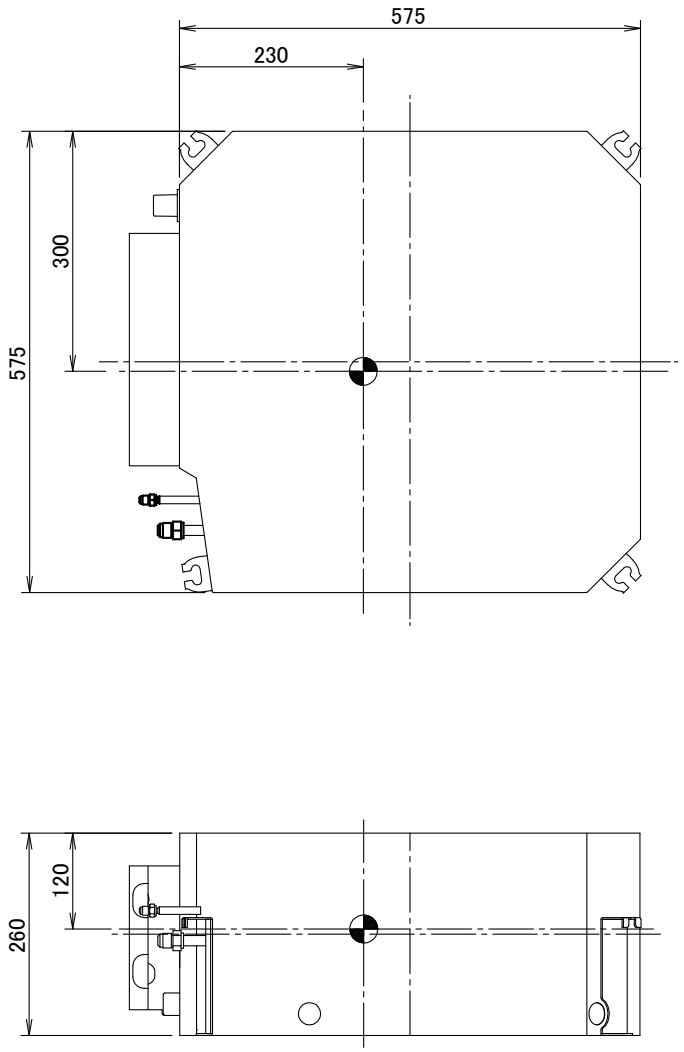

4D082432

7 Piping diagrams

7 - 1 Piping Diagrams

FFA-A9

Model	A	B
FFQ25C2VEB	6. 35	9. 52
FFQ35C2VEB		
FFQ50C2VEB		12. 7
FFQ60C2VEB		
FFA25A2VEB(9)		9. 52
FFA35A2VEB(9)		
FFA50A2VEB(9)		12. 7
FFA60A2VEB(9)		

Refrigerant flow

Cooling ——→

Heating - — — →

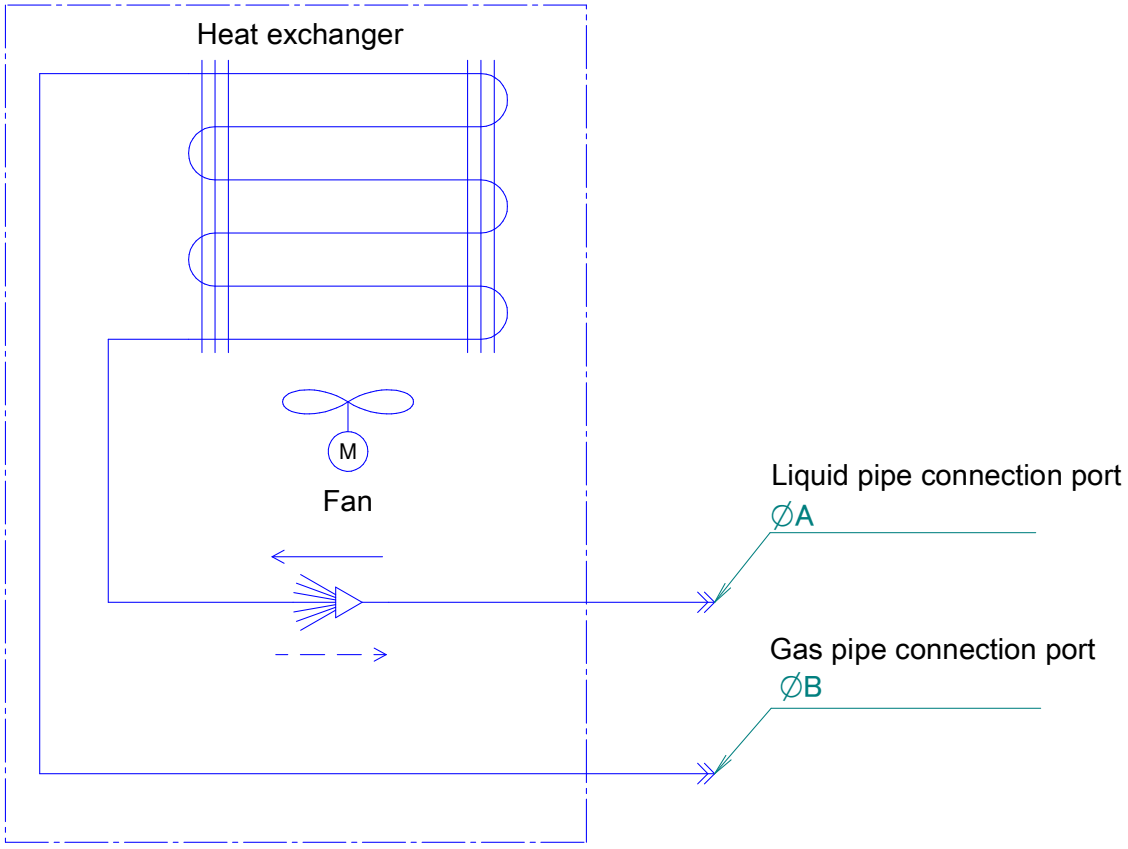

4D082551B

8 Wiring diagrams

8 - 1 Wiring Diagrams - Three Phase

FFA-A9

Wiring diagram

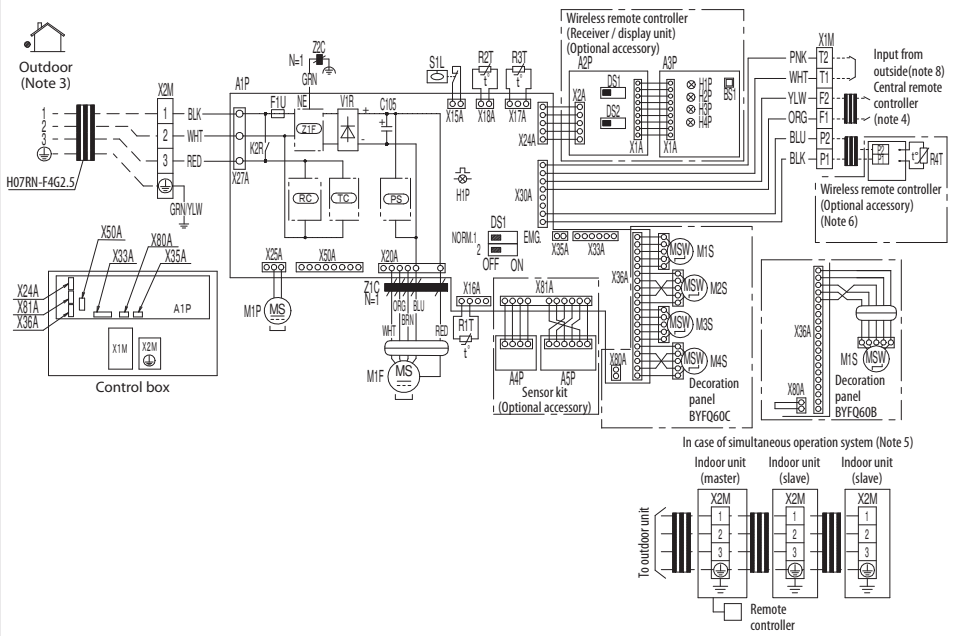

Indoor unit	
A1P	Printed circuit board
C105	Capacitor
DS1	Dip switch on PCB
F1U	Fuse (F, 3.15A, 250V)
H1P	Flashing lamp (service monitor green)
K2R	Magnetic relay
M1F	Fan motor
M1P	Drain pump motor
M1S • M2S M3S • M4S	Swing motor
R1T	Thermistor (air)
R2T • R3T	Thermistor (coil)
S1L	Float switch
V1R	Diode bridge
X1M	Terminal block
X2M	Terminal block
Z1F	Noise filter
Z1C	Ferrite core
Z2C	Ferrite core
PS	Switching power supply
RC	Receiver
TC	Transmitter
Wireless remote controller (Receiver / display unit)	
A2P • A3P	Printed circuit board
BS1	Push button switch on PCB
H1P	Pilot lamp (on-red)
H2P	Pilot lamp (timer-green)
H3P	Pilot lamp (filter sign-red)
H4P	Pilot lamp (defrost-orange)
DS1	Selector switch (main/sub)
DS2	Selector switch (wireless address set)
Sensor kit	
A4P	Printed circuit board
A5P	Printed circuit board
Wired remote controller	
R4T	Thermistor (air)
Connector for optional parts	
X24A	Connector (wiring remote controller)
X33A	Connector (adaptor for wiring)
X35A	Connector (power supply for adaptor)
X50A	Connector (WLAN adaptor)
X81A	Connector (sensor kit)

NOTES

1. Terminal block, : Connector, : Field wiring
2. In case of simultaneous operation indoor unit system, see the indoor unit wiring only.
3. For the detail, see wiring diagram attached to outdoor unit.
4. In case using central remote controller, connect it to the unit in accordance with the attached installation manual.
5. In case of simultaneous operation system, connection quantity of the indoor units varies according to the connection outdoor unit, confirm technical guide and catalog, etc. Before connecting.
6. In case of main/sub changeover, see the installation manual attached to remote controller.
7. Symbols show as follows: BLK: black, RED: red, BLU: blue, WHT: white, YLW: yellow, GRN: green, ORG: orange, BRN: brown, PNK:pink.
8. When connecting the input wiring from outside, forced OFF or ON/OFF control operation can be selected by the remote controller. See installation manual for more details.

3D109453B

DAIKIN
Fully flat cassette • FFA-A9
13

9 Sound data

9 - 1 Sound Pressure Spectrum

FFA25A9

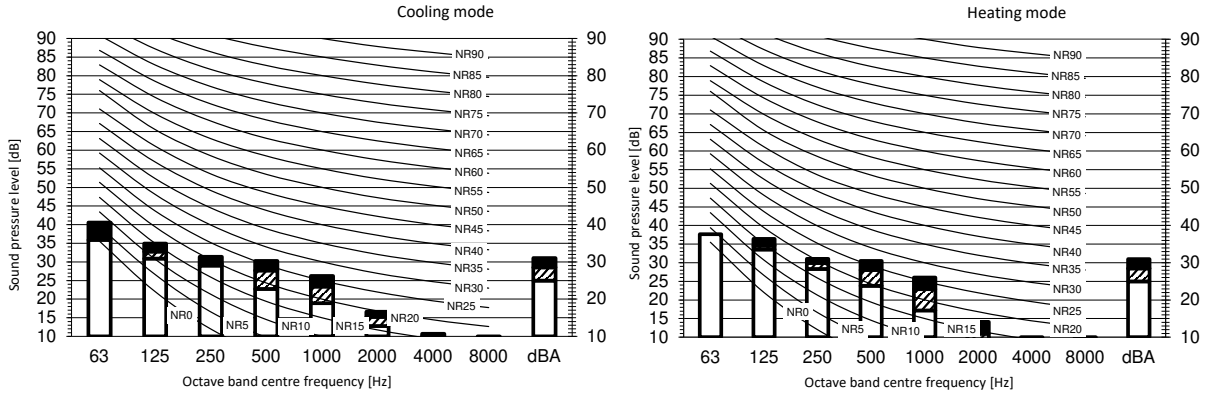

Legend

dBA = A-weighted sound pressure level (A scale according to IEC).

A Scale — Fan speed

B High

C Medium

D Low

Location of microphone

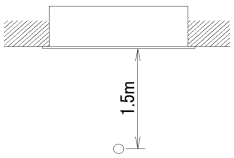

Cooling	Total dB		
A	B	C	D
dBA	31,0	28,5	25,0

Heating	Total dB		
A	B	C	D
dBA	31,0	28,5	25,0

Notes

1. Operating conditions: power source 220-240 V/220 V 50/60 Hz; JIS standard
2. Background noise already taken into account.
3. Operating noise varies depending on operation and ambient conditions.
4. The operation noise measuring method is in accordance with JISC9612.
5. Measuring location: anechoic chamber

3D109998A

FFA35A9

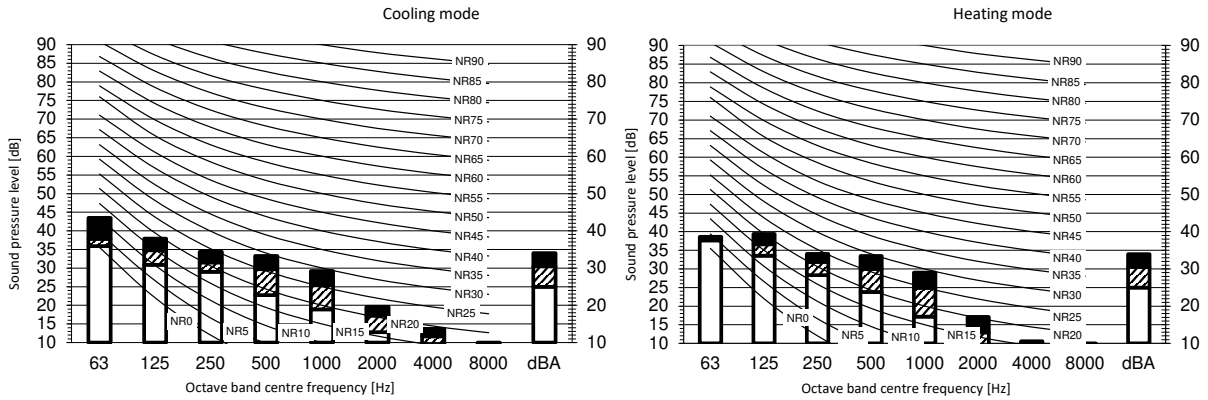

Legend

dBA = A-weighted sound pressure level (A scale according to IEC).

A Scale — Fan speed

B High

C Medium

D Low

Location of microphone

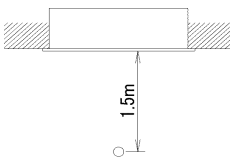

Cooling	Total dB		
A	B	C	D
dBA	34,0	30,5	25,0

Heating	Total dB		
A	B	C	D
dBA	34,0	30,5	25,0

Notes

1. Operating conditions: power source 220-240 V/220 V 50/60 Hz; JIS standard
2. Background noise already taken into account.
3. Operating noise varies depending on operation and ambient conditions.
4. The operation noise measuring method is in accordance with JISC9612.
5. Measuring location: anechoic chamber

3D109999A

9 Sound data

9 - 1 Sound Pressure Spectrum

FFA50A9

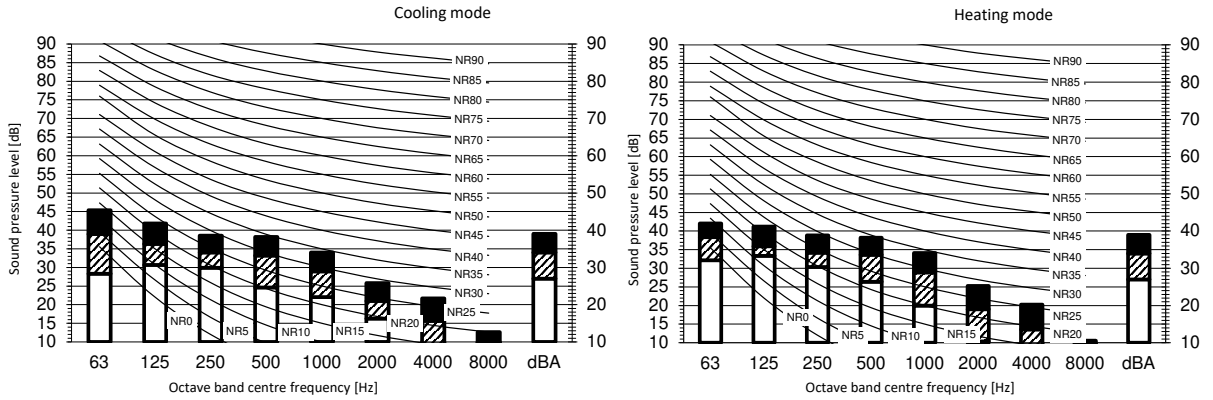

Legend

dBA = A-weighted sound pressure level (A scale according to IEC).

A Scale — Fan speed

B High

C Medium

D Low

Location of microphone

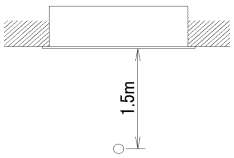

Cooling — Total dB

A	B	C	D
dBA	39,0	34,0	27,0

Heating — Total dB

A	B	C	D
dBA	39,0	34,0	27,0

Notes

1. Operating conditions: power source 220-240 V/220 V 50/60 Hz; JIS standard
2. Background noise already taken into account.
3. Operating noise varies depending on operation and ambient conditions.
4. The operation noise measuring method is in accordance with JISC9612.
5. Measuring location: anechoic chamber

3D110000A

FFA60A9

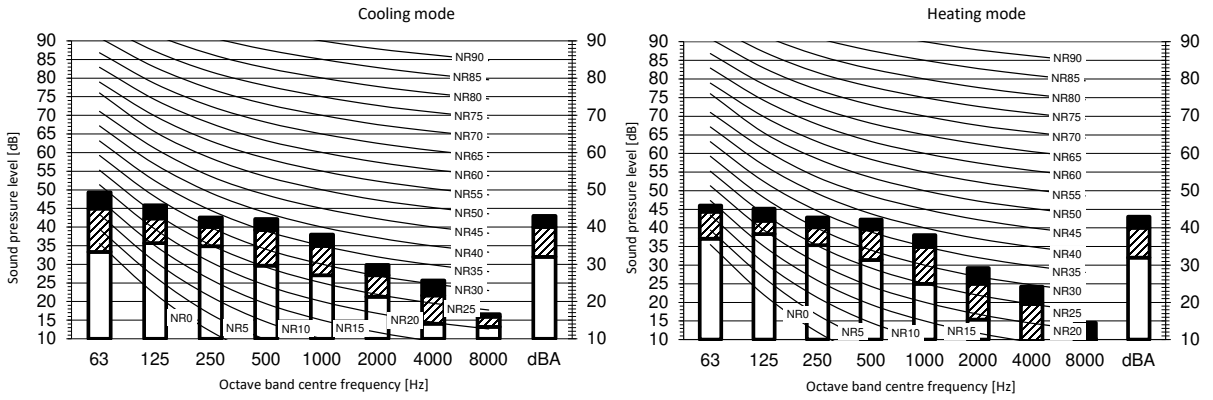

Legend

dBA = A-weighted sound pressure level (A scale according to IEC).

A Scale — Fan speed

B High

C Medium

D Low

Location of microphone

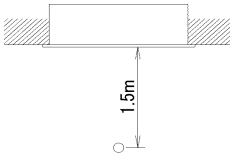

Cooling — Total dB

A	B	C	D
dBA	43,0	40,0	32,0

Heating — Total dB

A	B	C	D
dBA	43,0	40,0	32,0

Notes

1. Operating conditions: power source 220-240 V/220 V 50/60 Hz; JIS standard
2. Background noise already taken into account.
3. Operating noise varies depending on operation and ambient conditions.
4. The operation noise measuring method is in accordance with JISC9612.
5. Measuring location: anechoic chamber

3D110001A

10 Air flow patterns

10 - 1 Air Flow Pattern - Cooling

FFA25A9

Air velocity distribution (cooling)

Air flow direction: horizontal

Air discharge: all-round

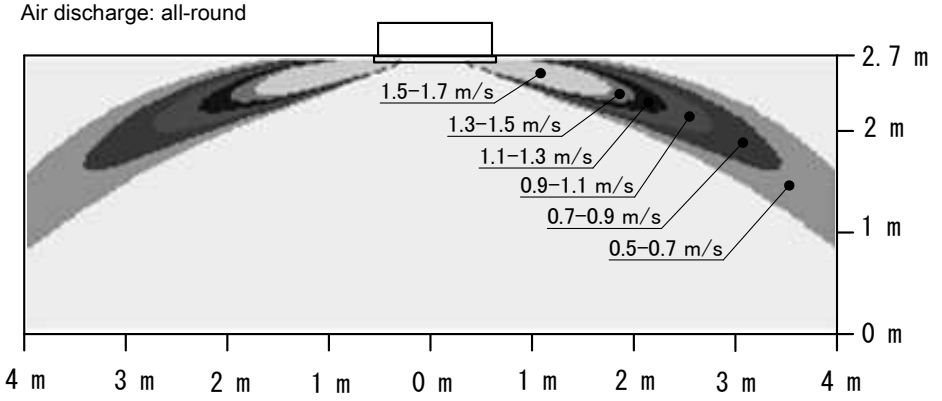

Air temperature distribution (cooling)

Air flow direction: horizontal

Air discharge: all-round

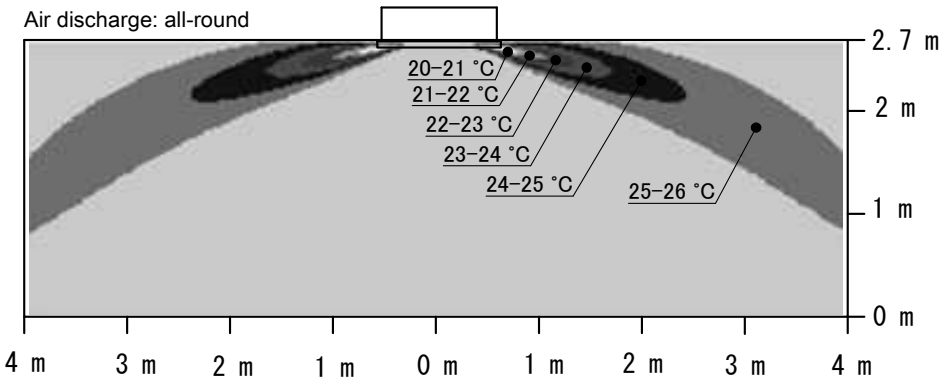

4D083819A

10 Air flow patterns

10 - 1 Air Flow Pattern - Cooling

FFA35A9

Air velocity distribution (cooling)

Air flow direction: horizontal
Air discharge: all-round

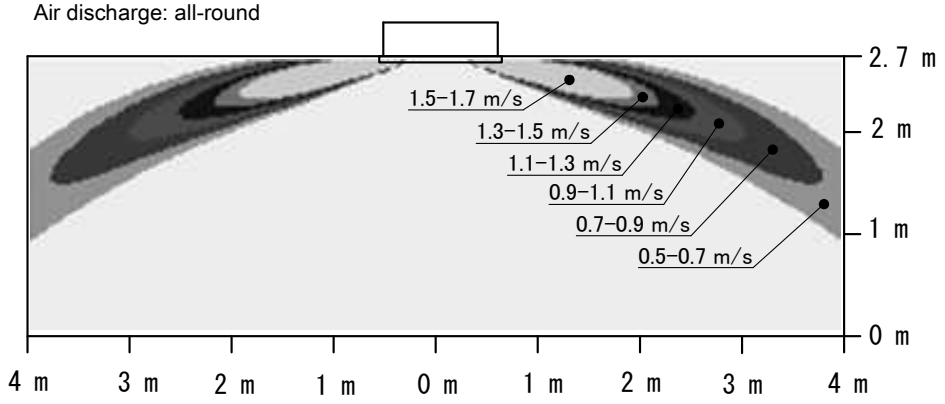

Air temperature distribution (cooling)

Air flow direction: horizontal
Air discharge: all-round

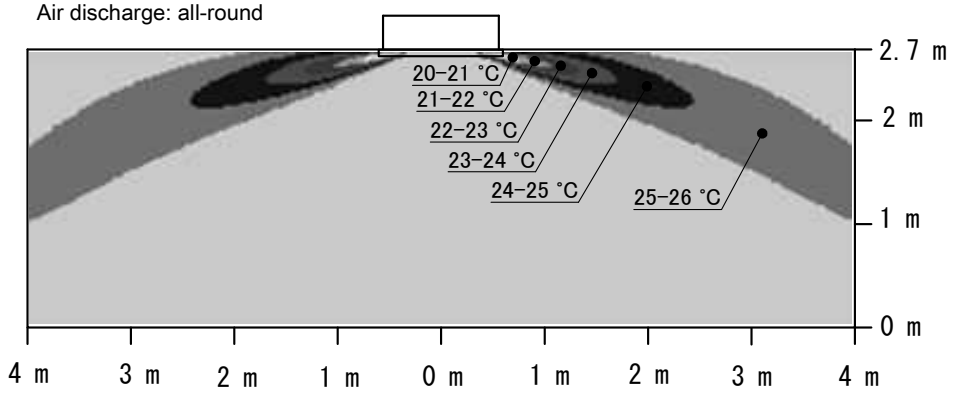

4D083820A

10 Air flow patterns

10 - 1 Air Flow Pattern - Cooling

FFA50A9

Air velocity distribution (cooling)

Air flow direction: horizontal

Air discharge: all-round

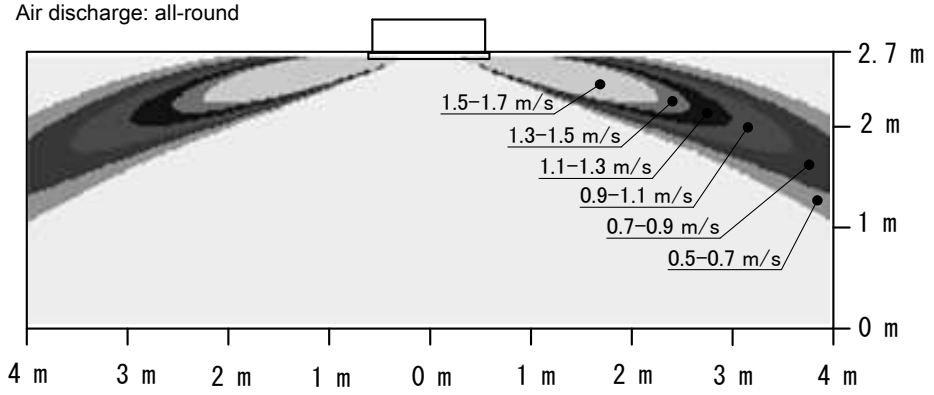

Air temperature distribution (cooling)

Air flow direction: horizontal

Air discharge: all-round

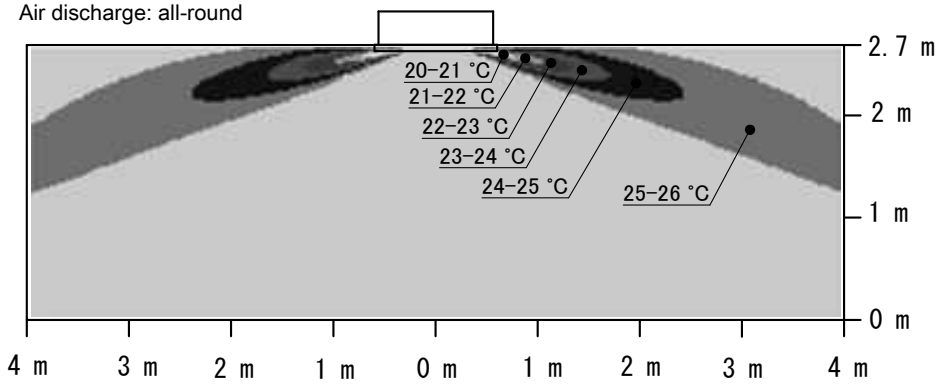

4D083821A

10 Air flow patterns

10 - 1 Air Flow Pattern - Cooling

FFA60A9

Air velocity distribution (cooling)

Air flow direction: horizontal
Air discharge: all-round

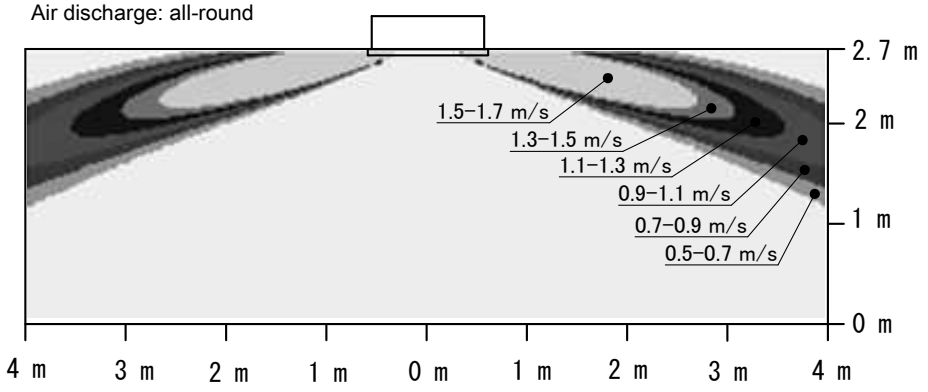

Air temperature distribution (cooling)

Air flow direction: horizontal
Air discharge: all-round

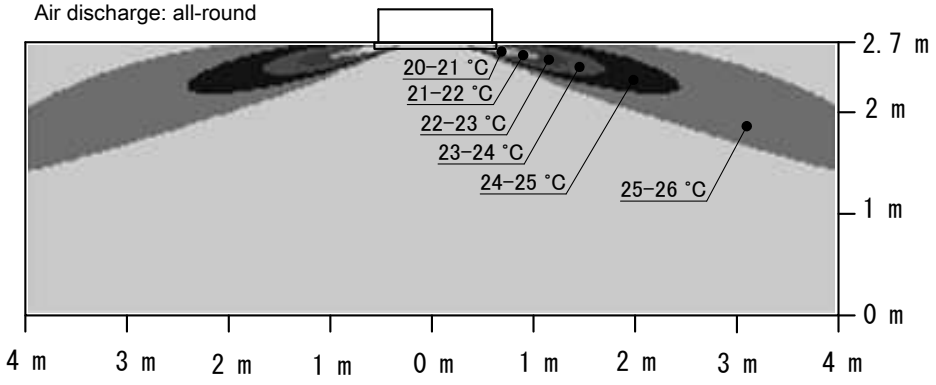

4D083822A

10 Air flow patterns

10 - 2 Air Flow Pattern - Heating

FFA25A9

Air velocity distribution (heating)

Air flow direction: horizontal

Air discharge: all-round

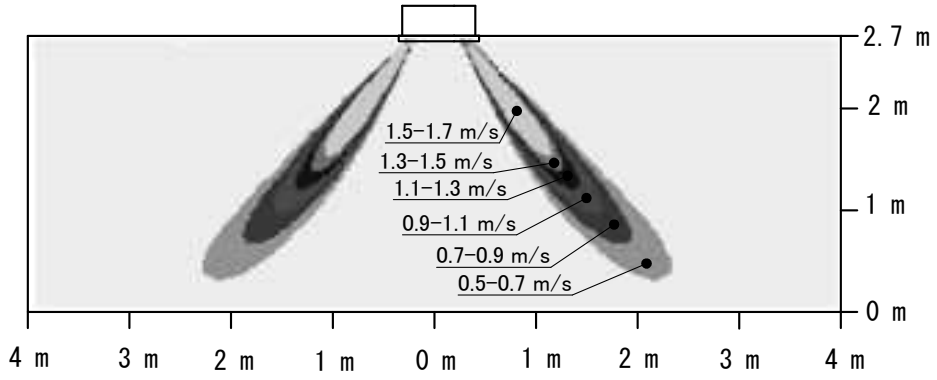

Air temperature distribution (heating)

Air flow direction: horizontal

Air discharge: all-round

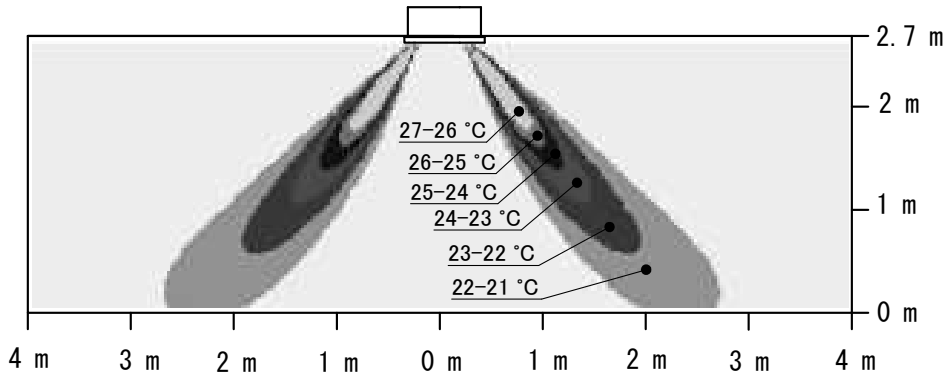

4D083829A

10 Air flow patterns

10 - 2 Air Flow Pattern - Heating

FFA35A9

Air velocity distribution (heating)

Air flow direction: horizontal

Air discharge: all-round

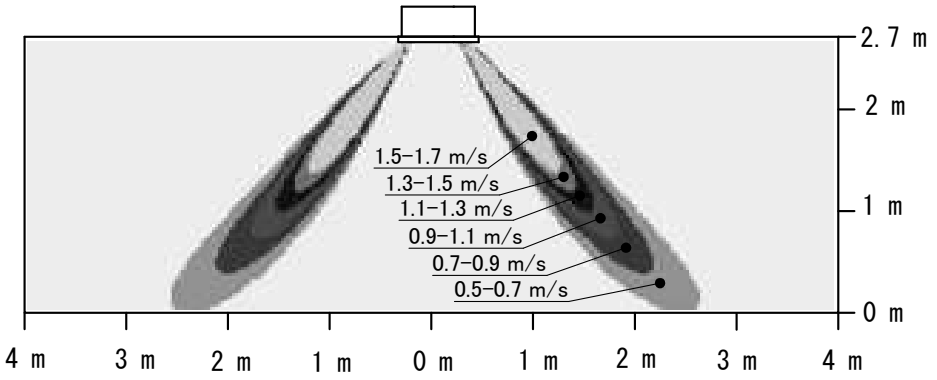

Air temperature distribution (heating)

Air flow direction: horizontal

Air discharge: all-round

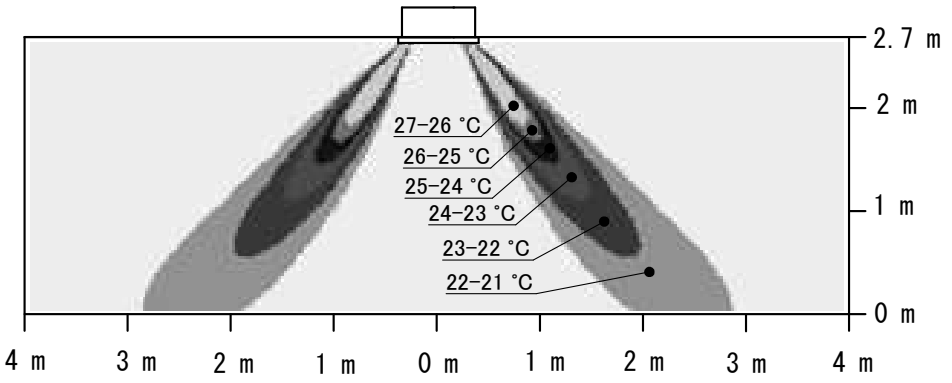

4D083830A

10 Air flow patterns

10 - 2 Air Flow Pattern - Heating

FFA50A9

Air velocity distribution (heating)

Air flow direction: horizontal

Air discharge: all-round

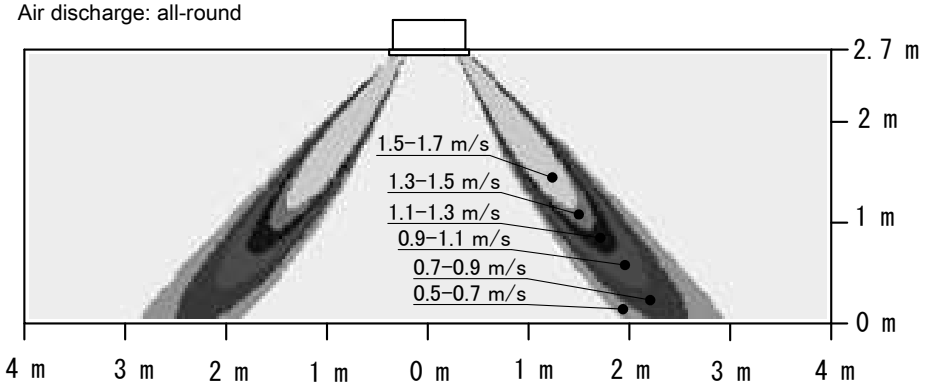

Air temperature distribution (heating)

Air flow direction: horizontal

Air discharge: all-round

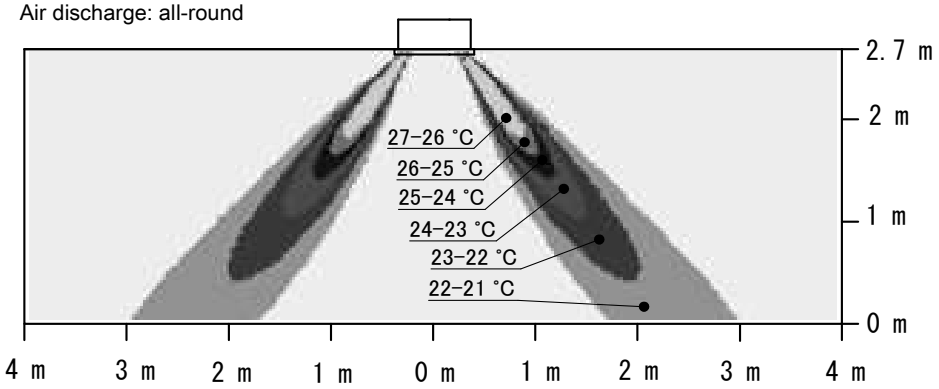

4D083831A

10 Air flow patterns

10 - 2 Air Flow Pattern - Heating

FFA60A9

Air velocity distribution (heating)

Air flow direction: horizontal

Air discharge: all-round

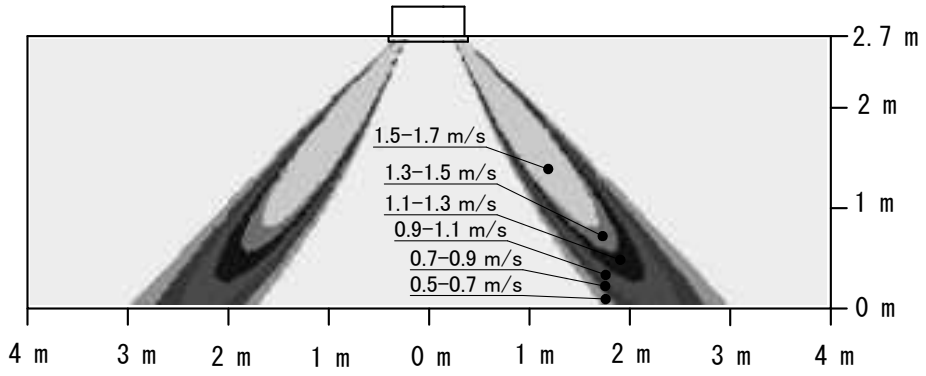

Air temperature distribution (heating)

Air flow direction: horizontal

Air discharge: all-round

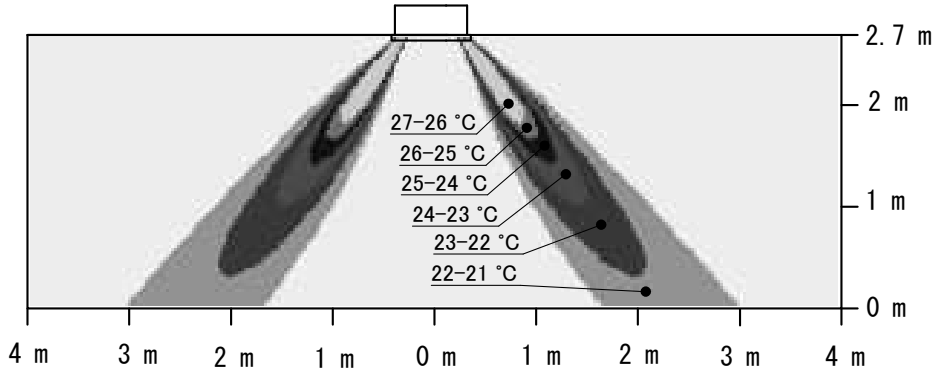

4D083832A

Daikin Europe N.V. Naamloze Vennootschap · Zandvoordestraat 300 · 8400 Oostende · Belgium · www.daikin.eu · BE 0412 120 336 · RPR Oostende (Responsible Editor)

EEDEN21 05/2021

The present publication is drawn up by way of information only and does not constitute an offer binding upon Daikin South Africa. Daikin South Africa has compiled the content of this publication to the best of its knowledge. No express or implied warranty is given for the completeness, accuracy, reliability or fitness for particular purpose of its content and the products and services presented therein. Specifications are subject to change without prior notice. Daikin South Africa explicitly rejects any liability for any direct or indirect damage, in the broadest sense, arising from or related to the use and/or interpretation of this publication. All content is copyrighted by Daikin South Africa.